Low Profile Flexible G2 Ø83 mm with driver

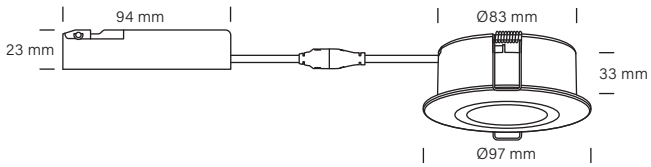

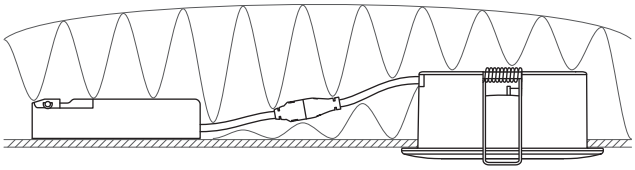

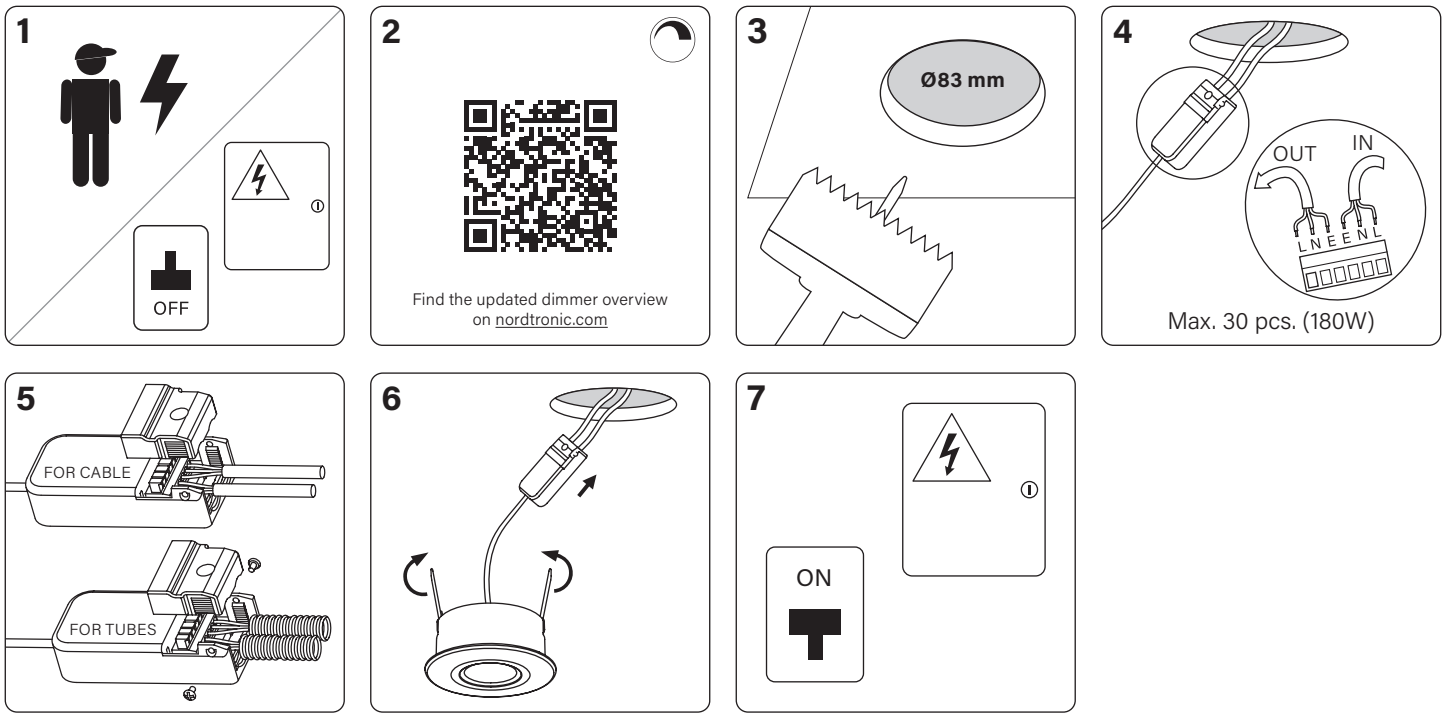

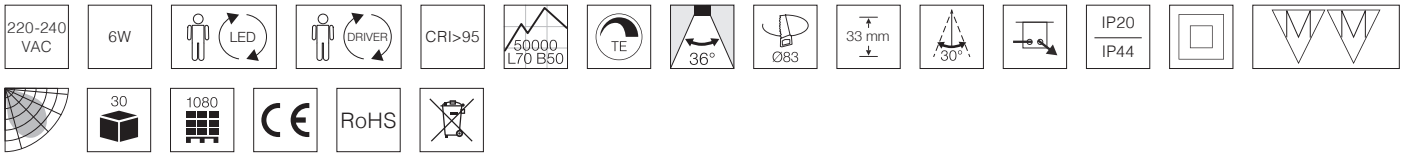

35811012-35811092, 35811013-35811093, 35811014-35811094: This product contains a light source in energy efficiency class F

35811017-35811097: This product contains a light source in energy efficiency class G

Find the updated manual on our website – nordtronic.com
With reservation for typing errors

Nordtronic A/S | Silovej 8, 12. sal | DK-9900 Frederikshavn | Denmark | CVR: 29808708
Tel: +45 7020 9531 | nordtronic.com

Manual
35811012-35811092, 35811013-35811093,
35811014-35811094, 35811017-35811097 | 05-2025
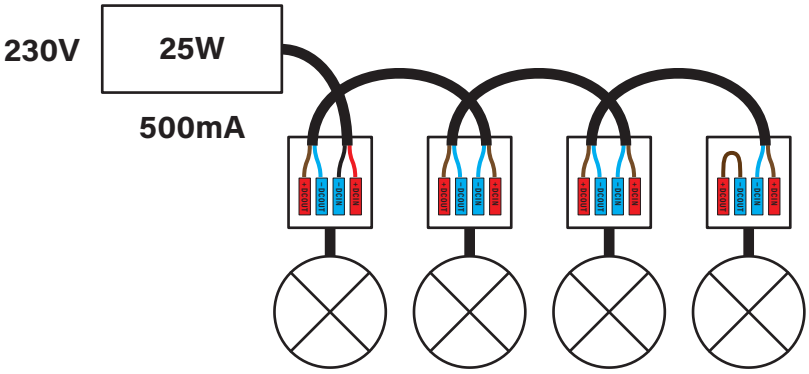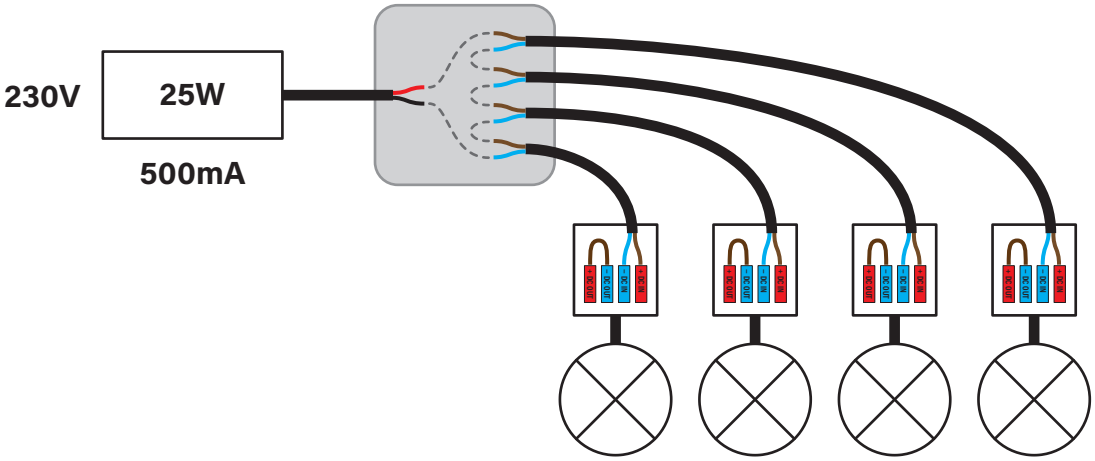
Low Profile Flexible G2